Radiation-Induced Pulse Noise in SOI CMOS Logic

D. Kobayashi, K. Hirose, H. Ikeda, and H. Saito
Institute of Space and Astronautical Science
Japan Aerospace Exploration Agency

ソフトエラー（などのLSIにおける放射線効果）に 関する第1回勉強会（京都）2011年9月7--8日

Most part of this material is presented in an invited talk at
Int'l Symp on Advanced Semiconductor-on-insulator Technology and Related Physics
219th ECS Meeting, Montreal, Canada, May. 4, 2011

Outline

Radiation-Induced Pulse Noise in SOI CMOS Logic

1. How serious radiation problems are
2. Merits and demerits of SOI
3. Pulse-noise problems in logic gate
4. Summary

An example of basic radiation effects

Drain current behavior of 0.2-μm FD-SOI nMOSFET

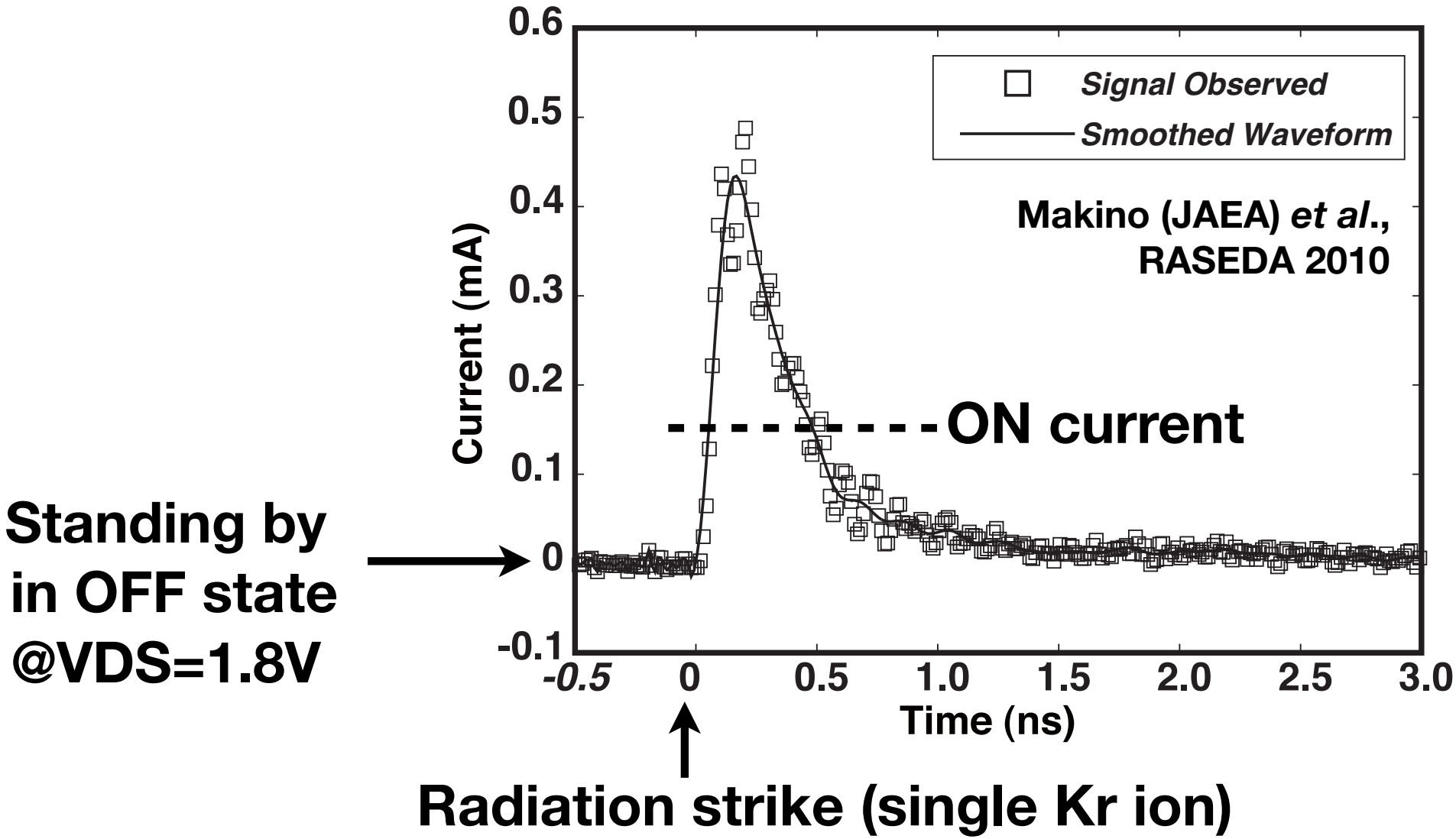

Basic parameters of studied SOI tech.

Commercial 0.2-μm FD-SOI

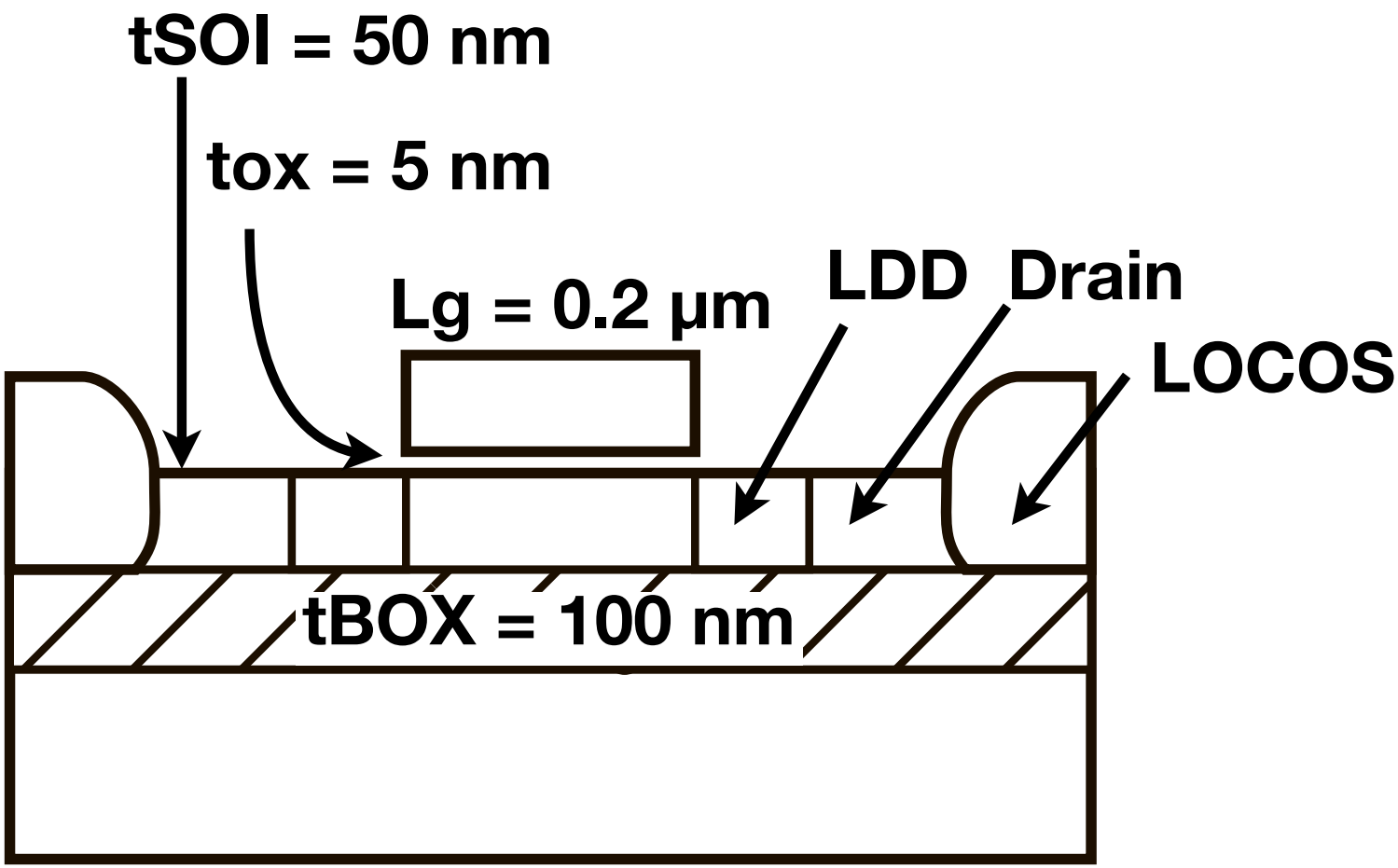

8-inch bond-and-etch-back SOI wafer

Publication number history

Google scholar result (May 2, 2011): number of publications with keywords in anywhere in the articles and patents including citations

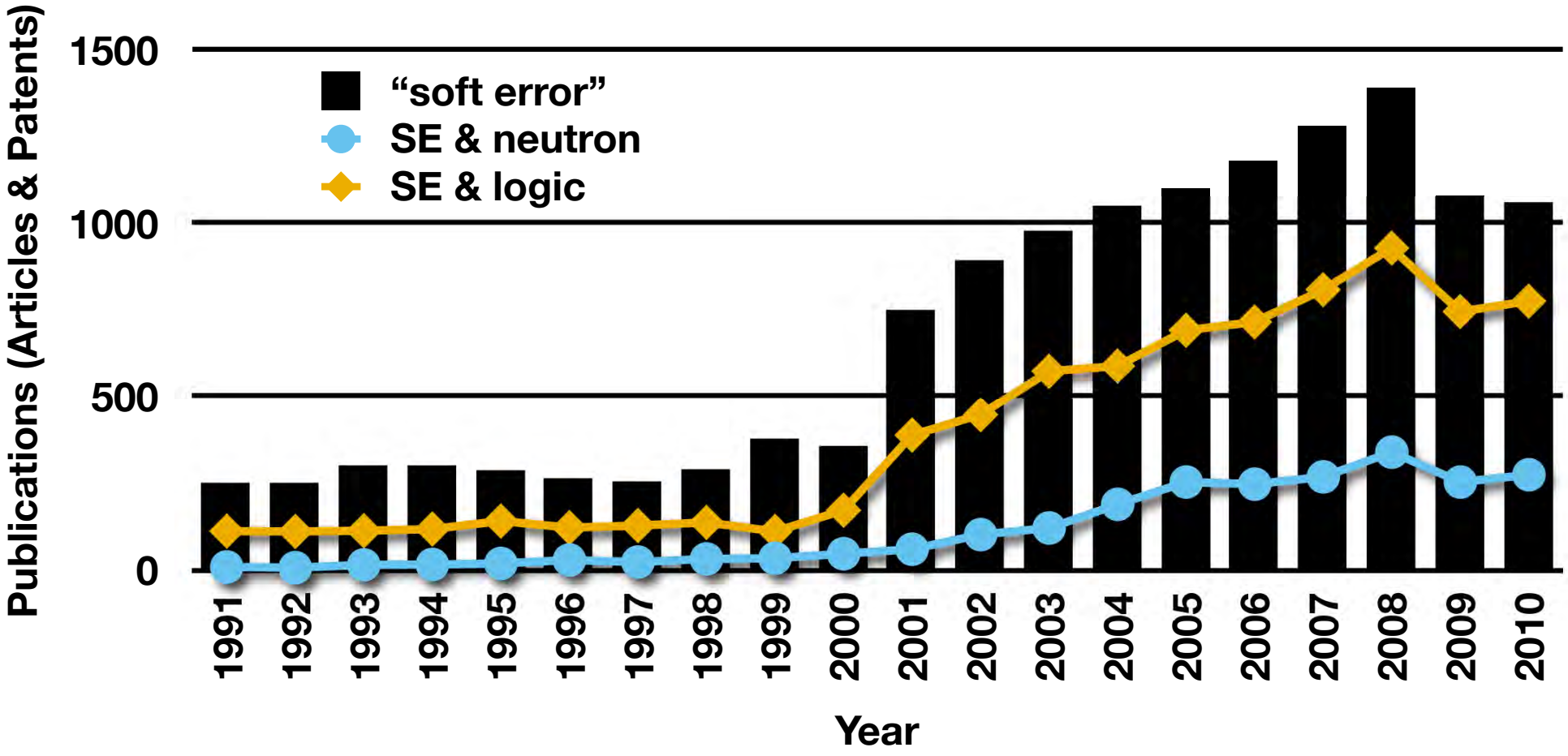

"Logic" and "Neutron"

Soft error is a serous problem

LiveScience (March 26, 2010)
http://www.livescience.com/technology/toyota-recall-cosmic-rays-100326.html

Technology

Subscribe to RSS | View all Articles

Toyota Recall Might Be Caused by Cosmic Rays

By Denise Chow, LiveScience Staff Writer
posted: 26 March 2010 11:32 am ET

Comments (21) | Recommend (13)

It may not lessen Toyota's woes to hear that the problems the company has been having with faulty gas pedals could be blamed on cosmic rays from space. Sound unbelievable? The concept is actually a lot more plausible than you might think.

Acceptable concept (Real reason is unknown)

ECC is already essential in cache memories for enterprise servers...
Intel developed rad-hard Itanium processor already...

Our living space is filled up with neutrons

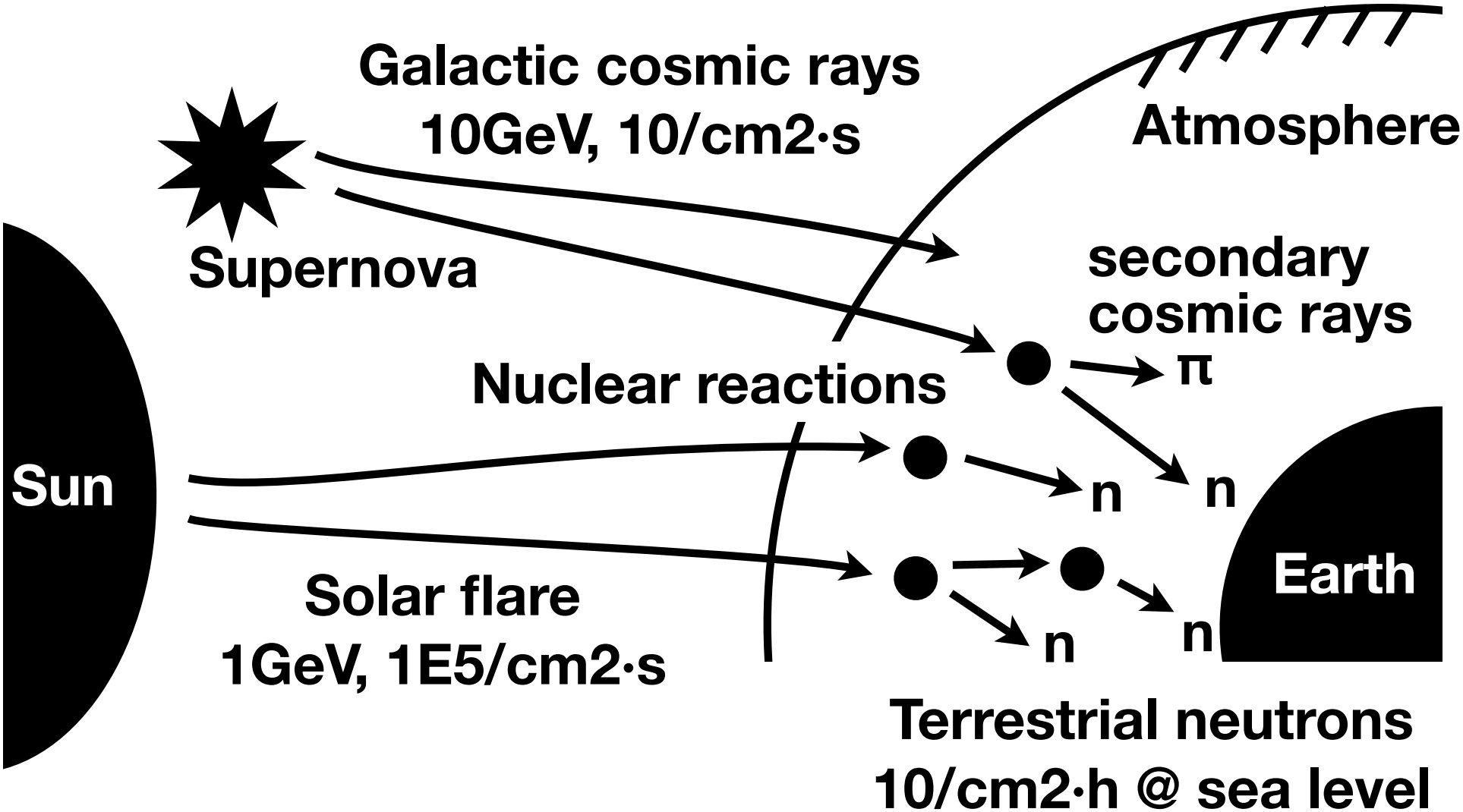

Space: H.-Siedle and Adams, "Hand book of radiation effects", Oxford, 2001
Terrestrial: Ziegler (IBM) *et al*., IBM J. Research and Development 40, 1996 p3

How strong are they?

Linear Energy Transfer (LET), explains ionizing ability

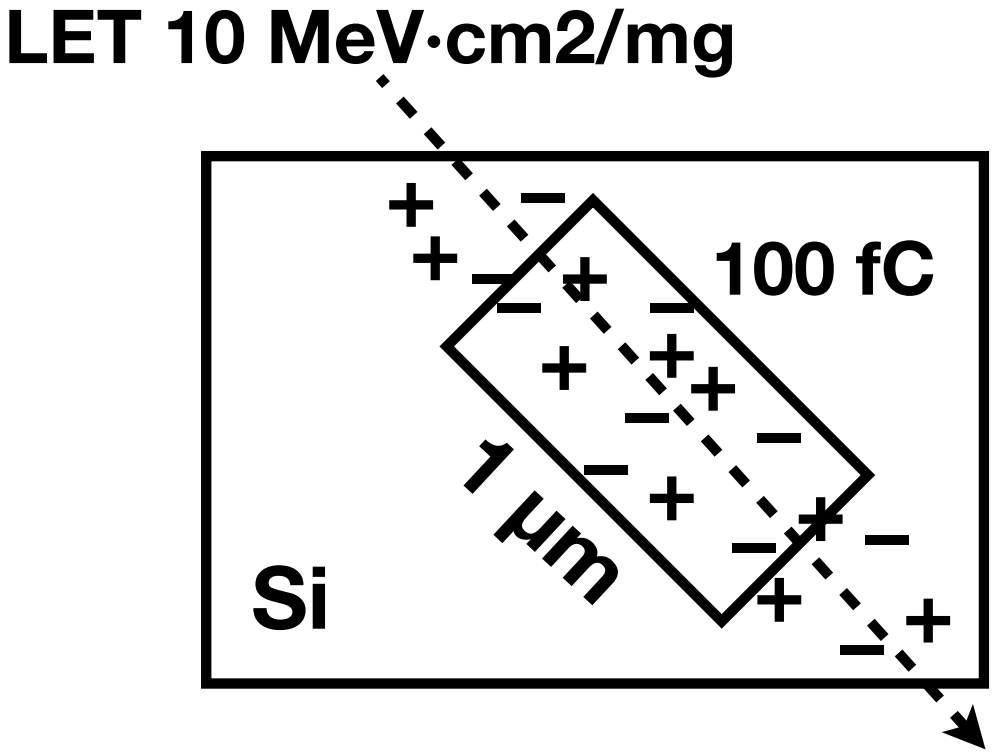

SOI is known as a strong technology to radiation.
Now is a time to show our stuff!

Outline

Radiation-Induced Pulse Noise in SOI CMOS Logic

1. How serious radiation problems are
2. Merits and demerits of SOI
3. Pulse-noise problems in logic gate
4. Summary

People say, SOI is strong to radiation

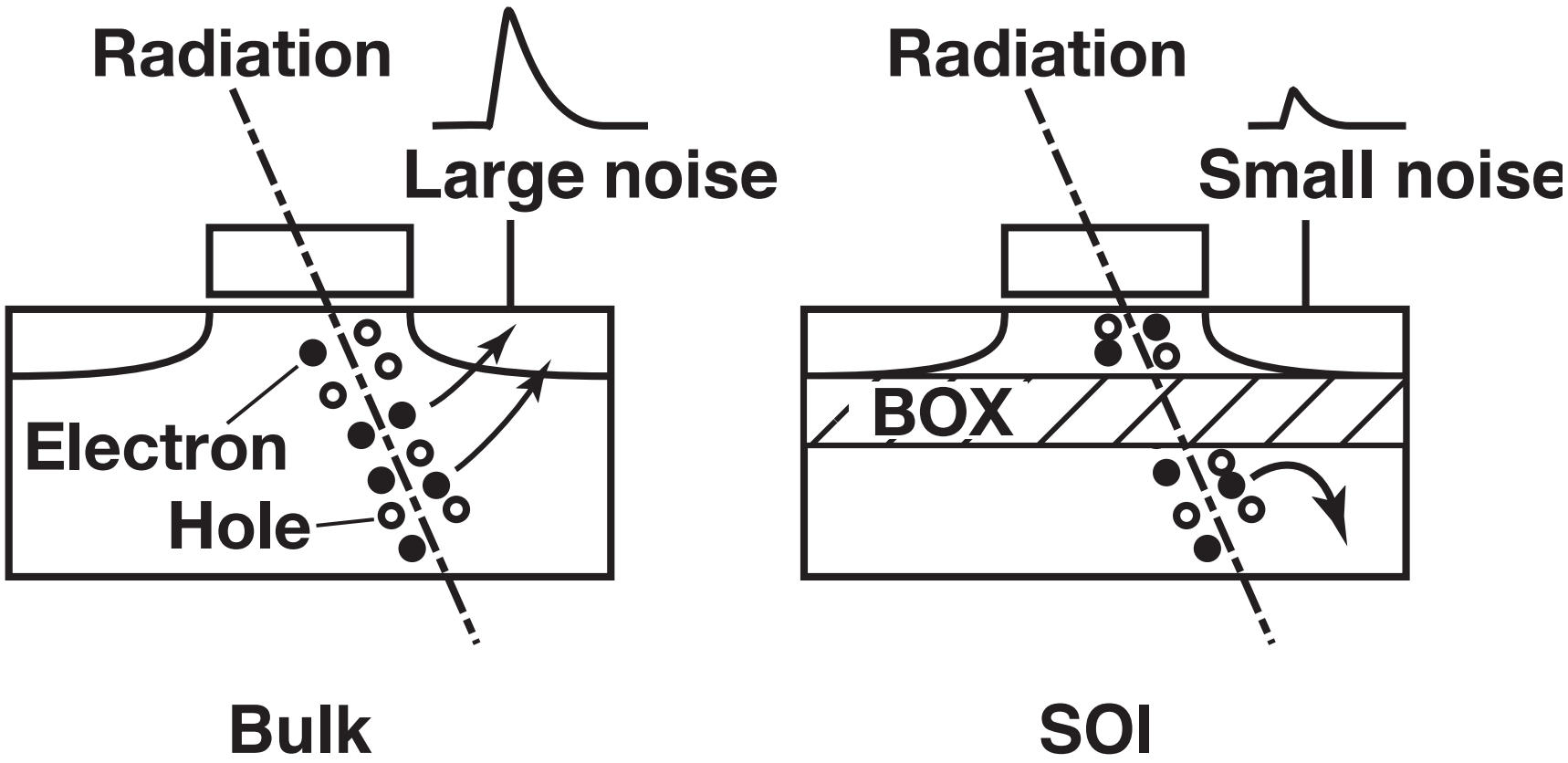

In the bulk case, noise charge in the deep substrate region can reach the signal (drain) terminal but not in the SOI case because of the BOX layer.

That's not so simple

Small parasitic capacitance results in high sensitivity to noise signals

Parasitic bipolar structure can amplify noises

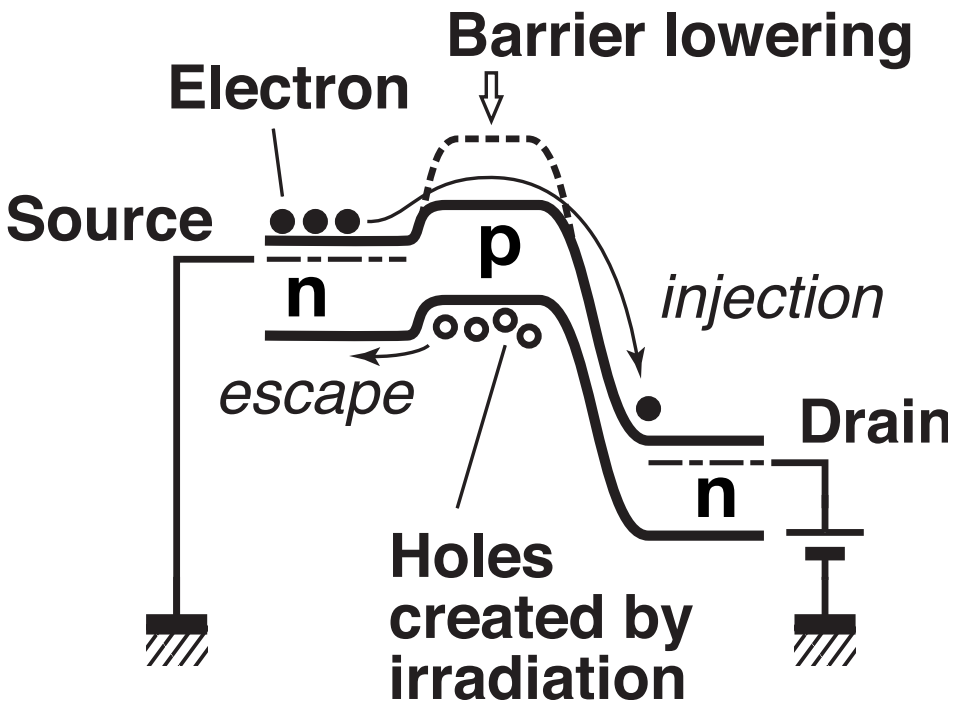

1. noise charge is deposited in body
2. holes are confined
3. npn-BJT turns on

Large noise

How large?

Bipolar amplification effect

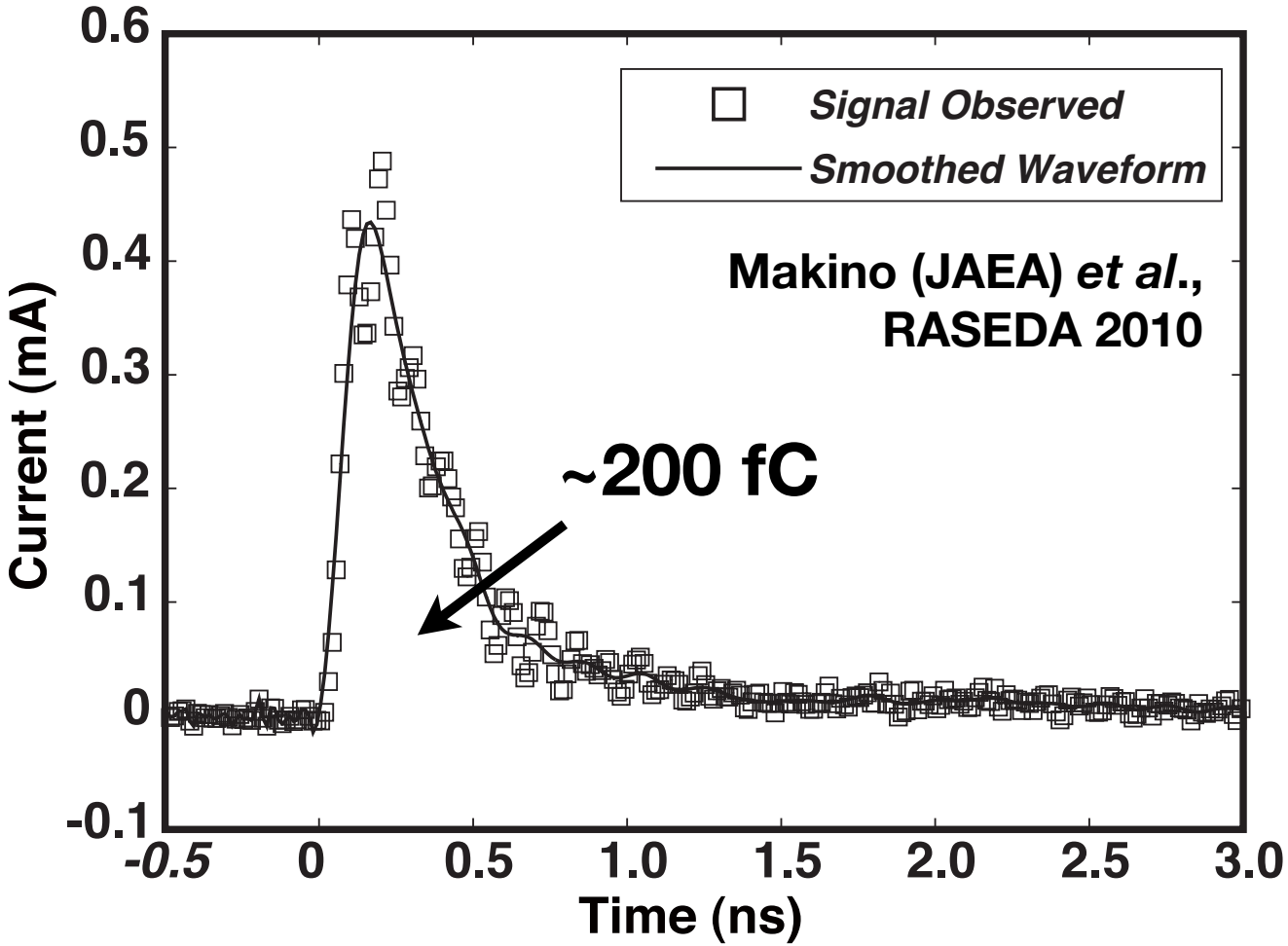

x10 larger than charge deposited (20 fC)
Important to suppress this amplification effect

Body tie effect: SRAM sensitivity to n

Baggio (CEA) *et al.*, IEEE Trans. Nucl. Sci. 52, 2005, p2319

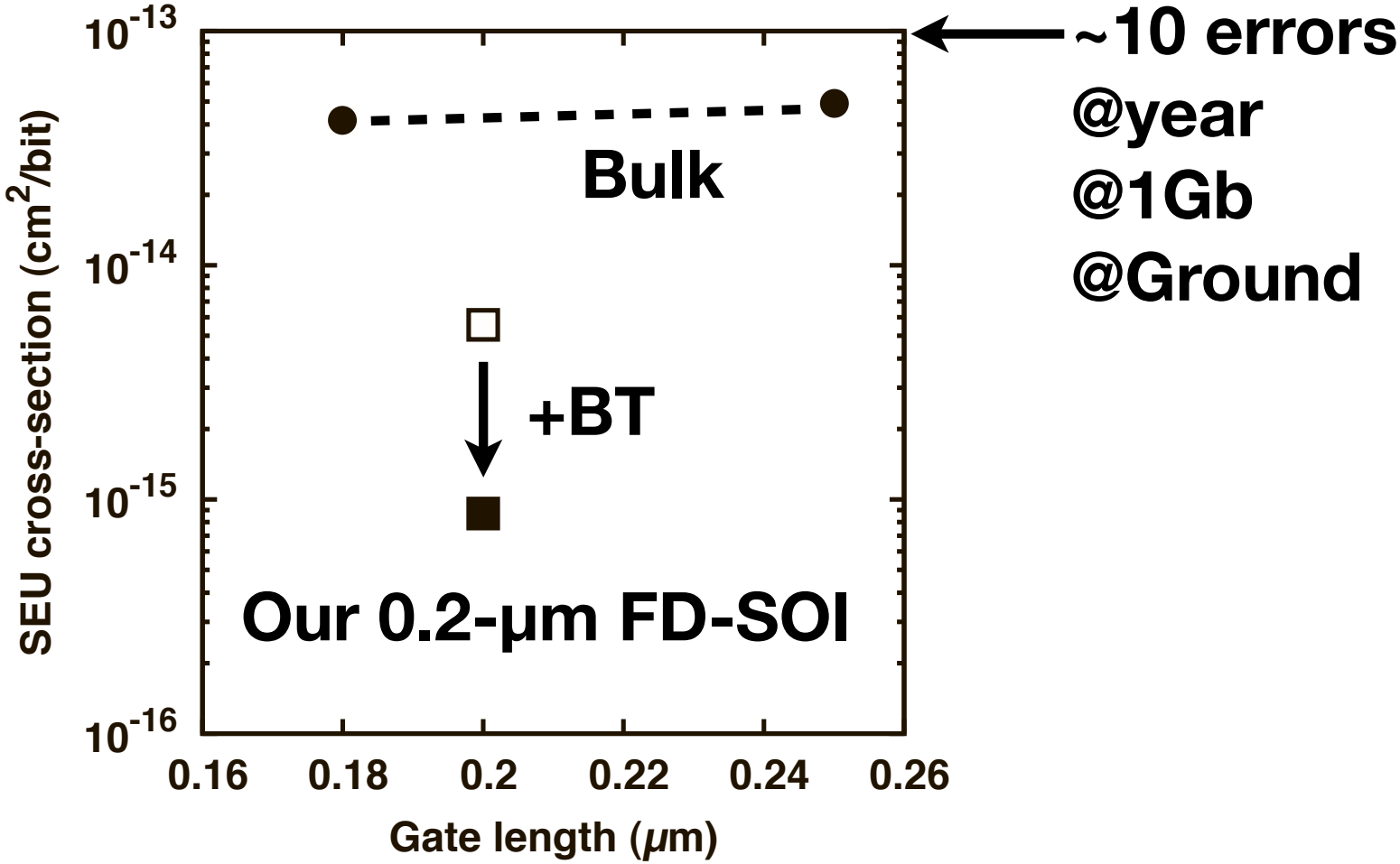

FD-SOI SRAM is harder than bulk but not enough.
BT is effective to suppress parasitic bipolar amp. effect

Rad-hard SRAM for space

K. Hirose (ISAS) *et al.*, IEEE Trans. Nucl. Sci. 49, 2002 p2965

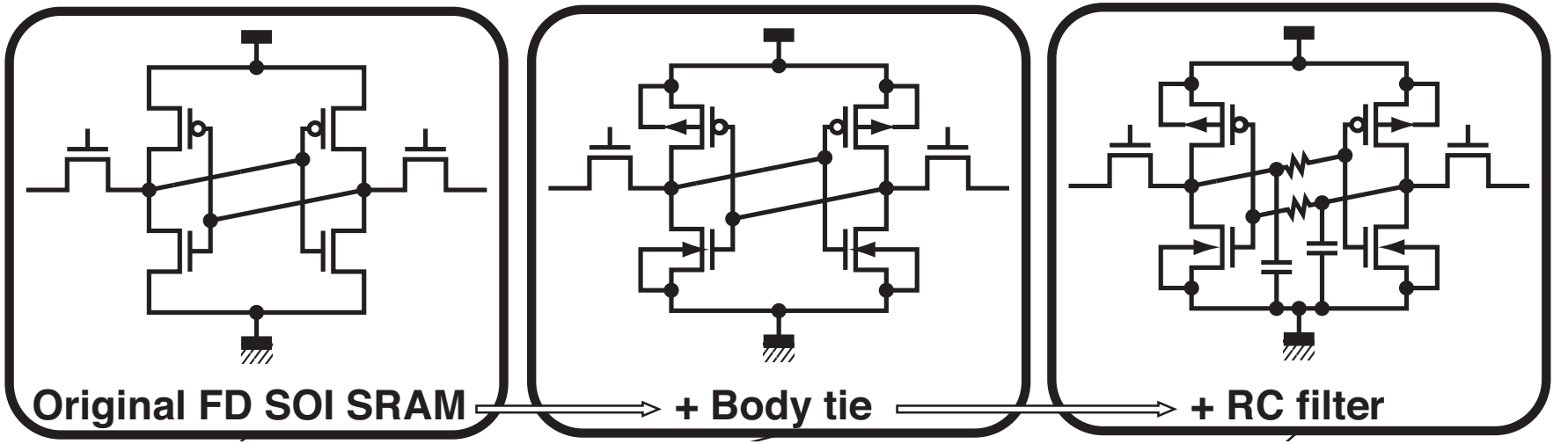

3.6 9.0 40

Threshold LET for bit upset in MeV•cm2/mg

Original T. neutrons G. cosmic rays

RC filter is used for space applications

Combined use of BT + RC is important

Only RC requires a really large RC value, practically unacceptable

Cell library is available

Hirose (ISAS) *et al*., 日本航空宇宙学会誌 58(683), 2010 p365 (in Japanese)

All memory elements such as SRAM, latches are protected by optimized RC + BT

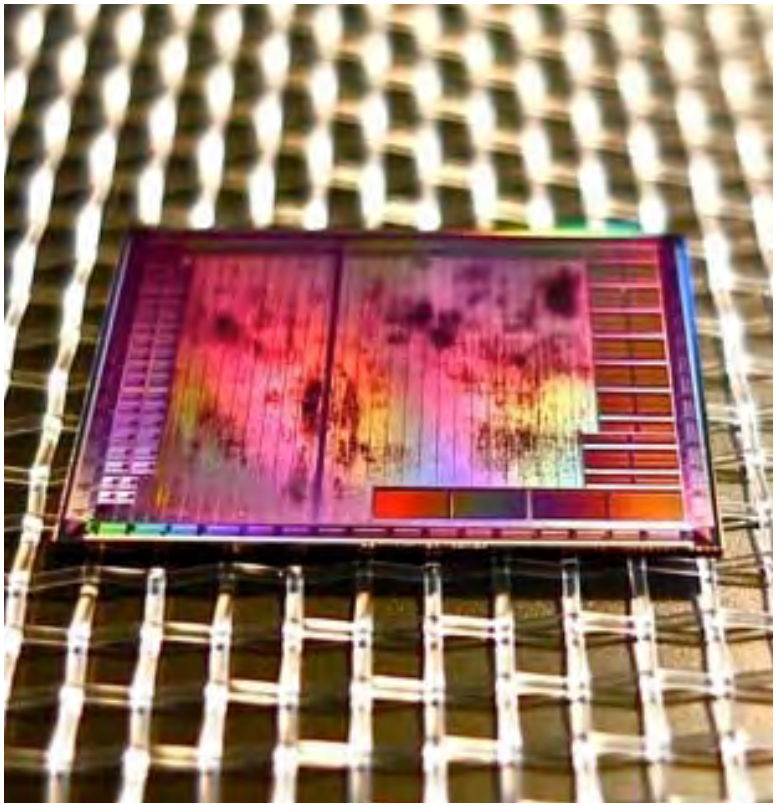

Mitsubishi Heavy Industries, Ltd.
SoC for space applications
- 32-bit CPU (100MIPS) with FPU
- Cache memory
- SpaceWire Interface

Outline

Radiation-Induced Pulse Noise in SOI CMOS Logic

1. How serious radiation problems are
2. Merits and demerits of SOI
3. Pulse-noise problems in logic gate
4. Summary

Pulse-noise problems in logic gate

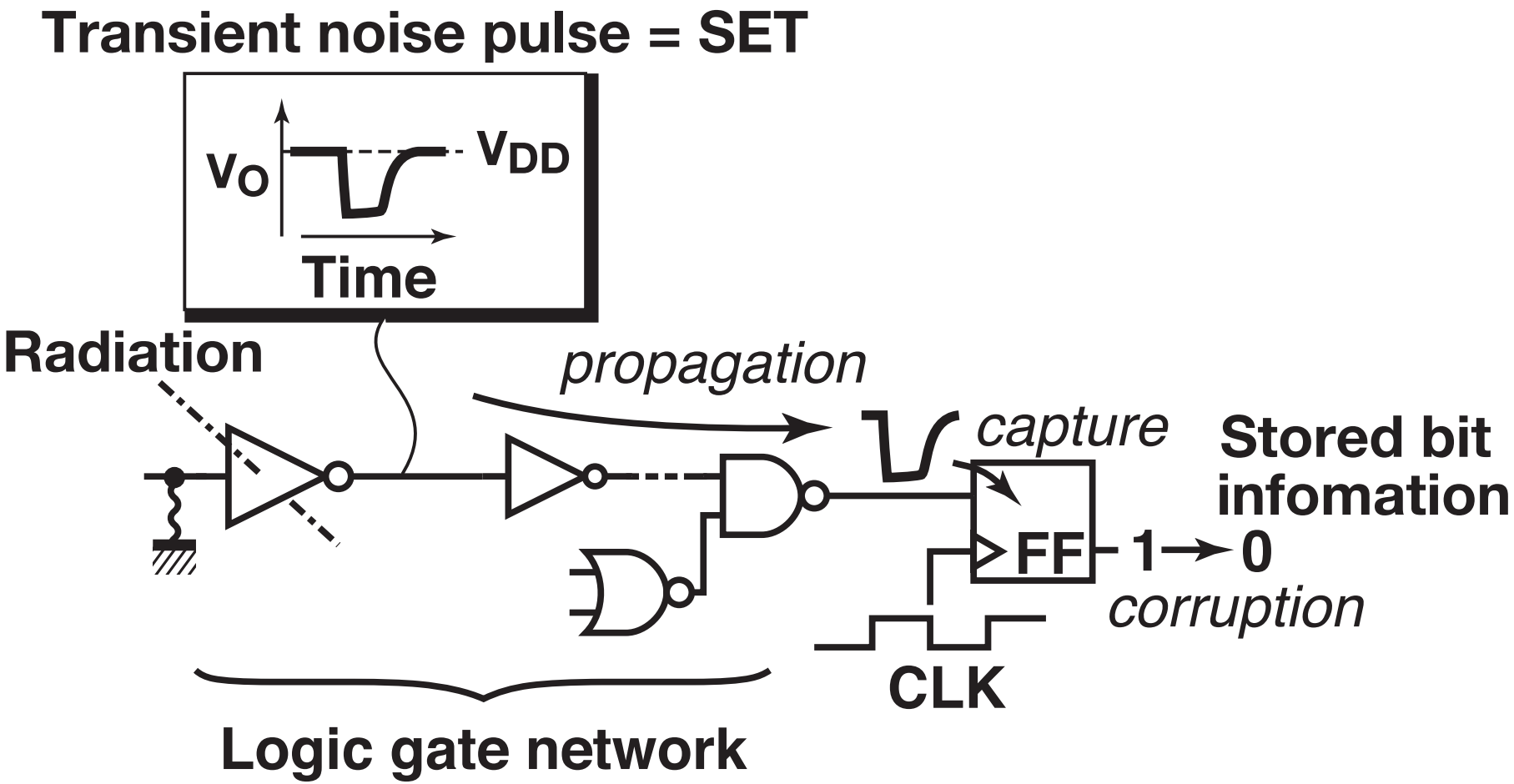

For now this SET effect is negligible

But many predictions say it becomes serious soon

Original pulse information is essential

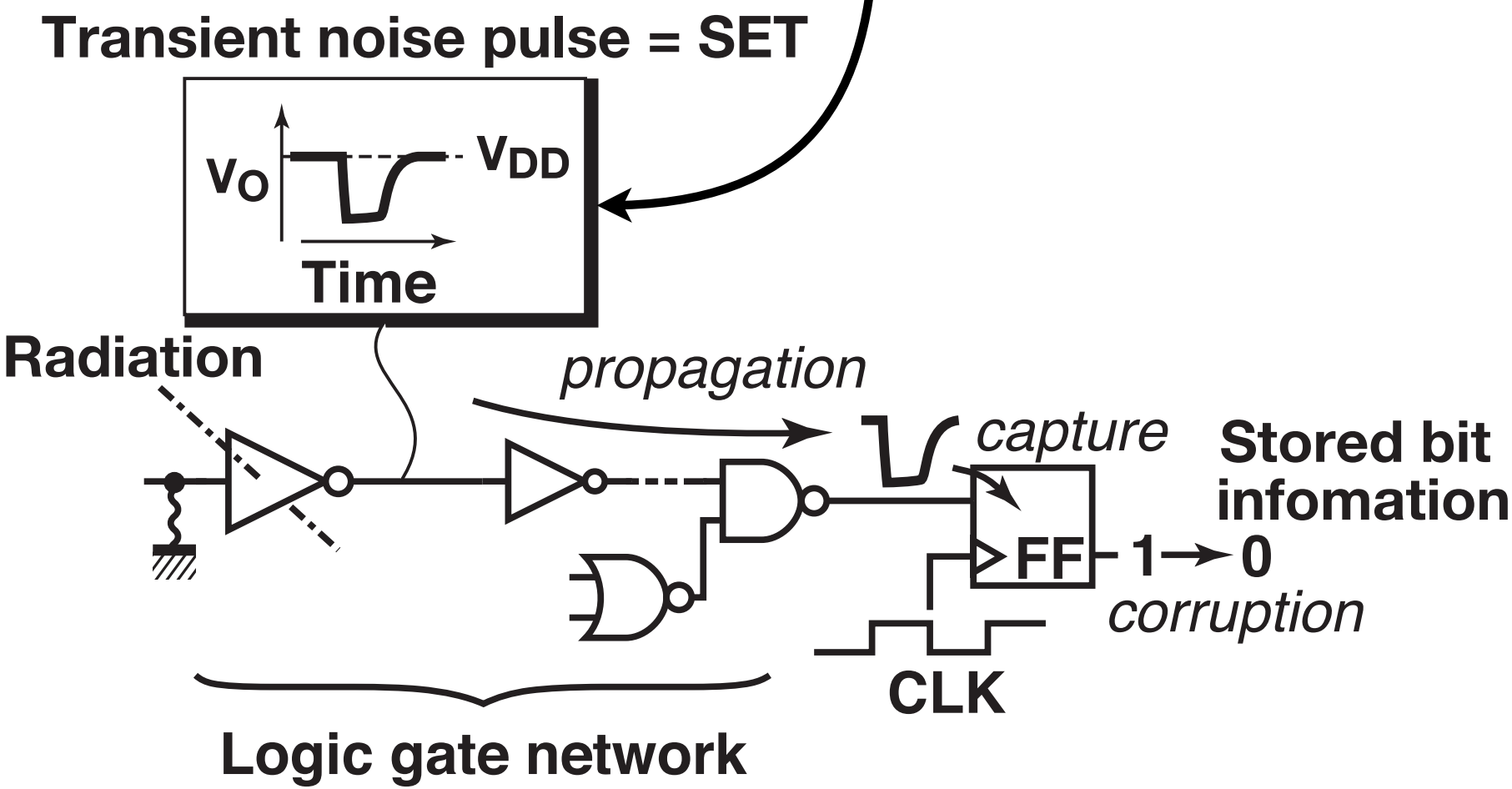

i. On-chip pulse-width measurement
ii. Full-waveform observation technique
iii. Physics-based analytical model

On-chip pulse width measurement

Yanagawa (ISAS) *et al*., IEEE Trans. Nucl. Sci. 53(6) 2006 p3575

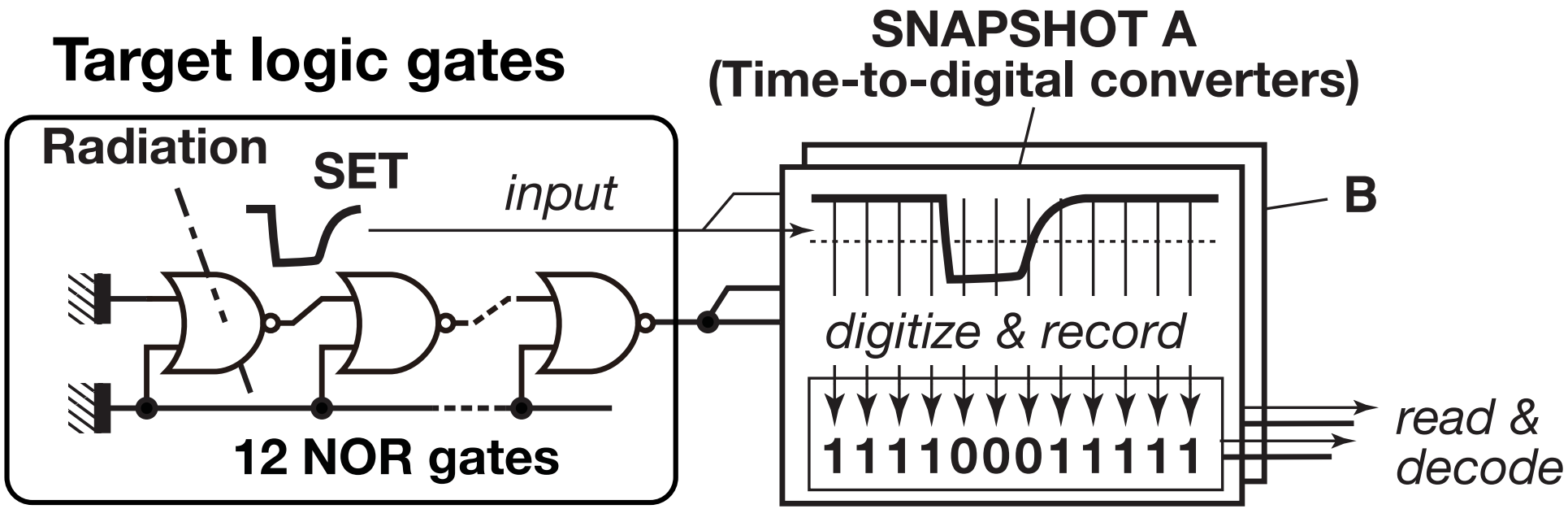

World-first experimental demonstration

Yanagawa (ISAS) *et al*., IEEE Trans. Nucl. Sci. 53(6) 2006 p3575

NORs (w/o BT) under irradiation with LET 40 MeV·cm2/mg

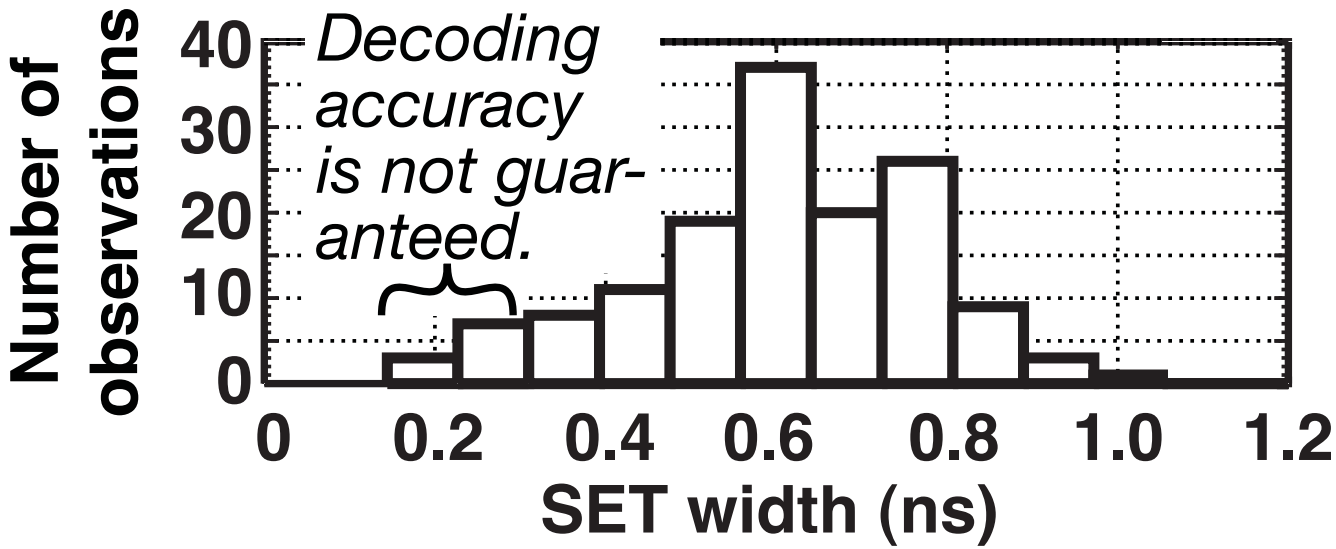

Comparison with bulk

Makino (ISAS) *et al*., IEEE Trans. Nucl. Sci. 56(6), 2009 p3180

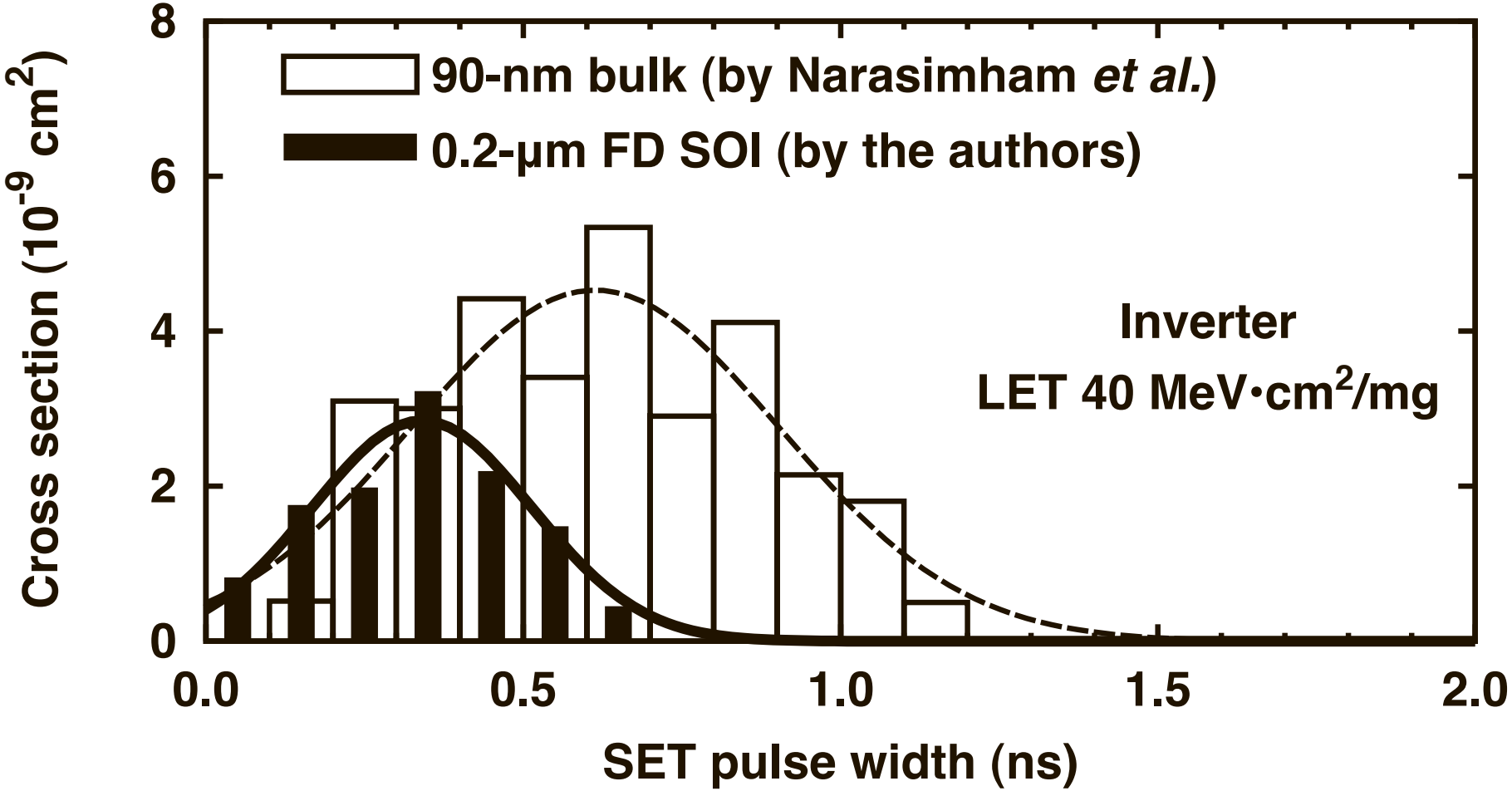

1. Lower sensitivity than bulk

2. Shorter pulse (←?)

Pulse can be broadened

Propagation-induced pulse broadening (PIPB)

Ferlet-Cavrois (CEA) *et al.*, IEEE Trans. Nucl. Sci. 54, 2007, p2338

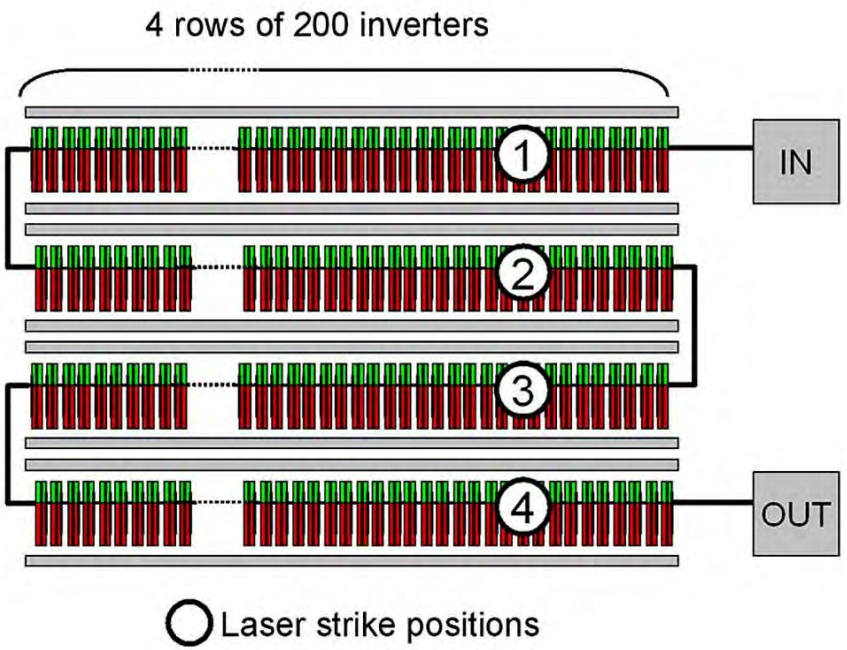

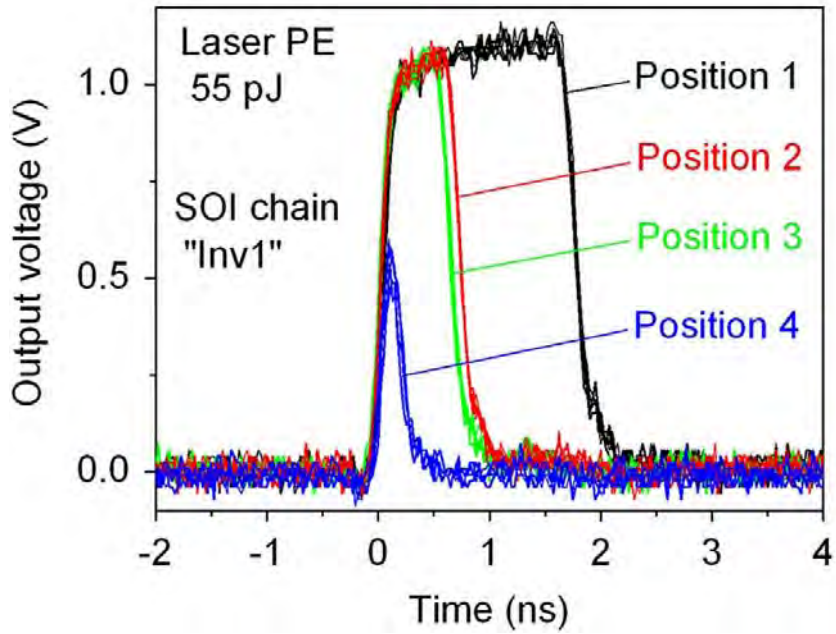

Floating body effect: dynamic VT change leads to pulse broadening during propagation

Wei (MIT) *et al.*, IEEE Electron Device Lett. 17, 1996, p391

Comparison with bulk

Makino (ISAS) *et al*., IEEE Trans. Nucl. Sci. 56(6), 2009 p3180

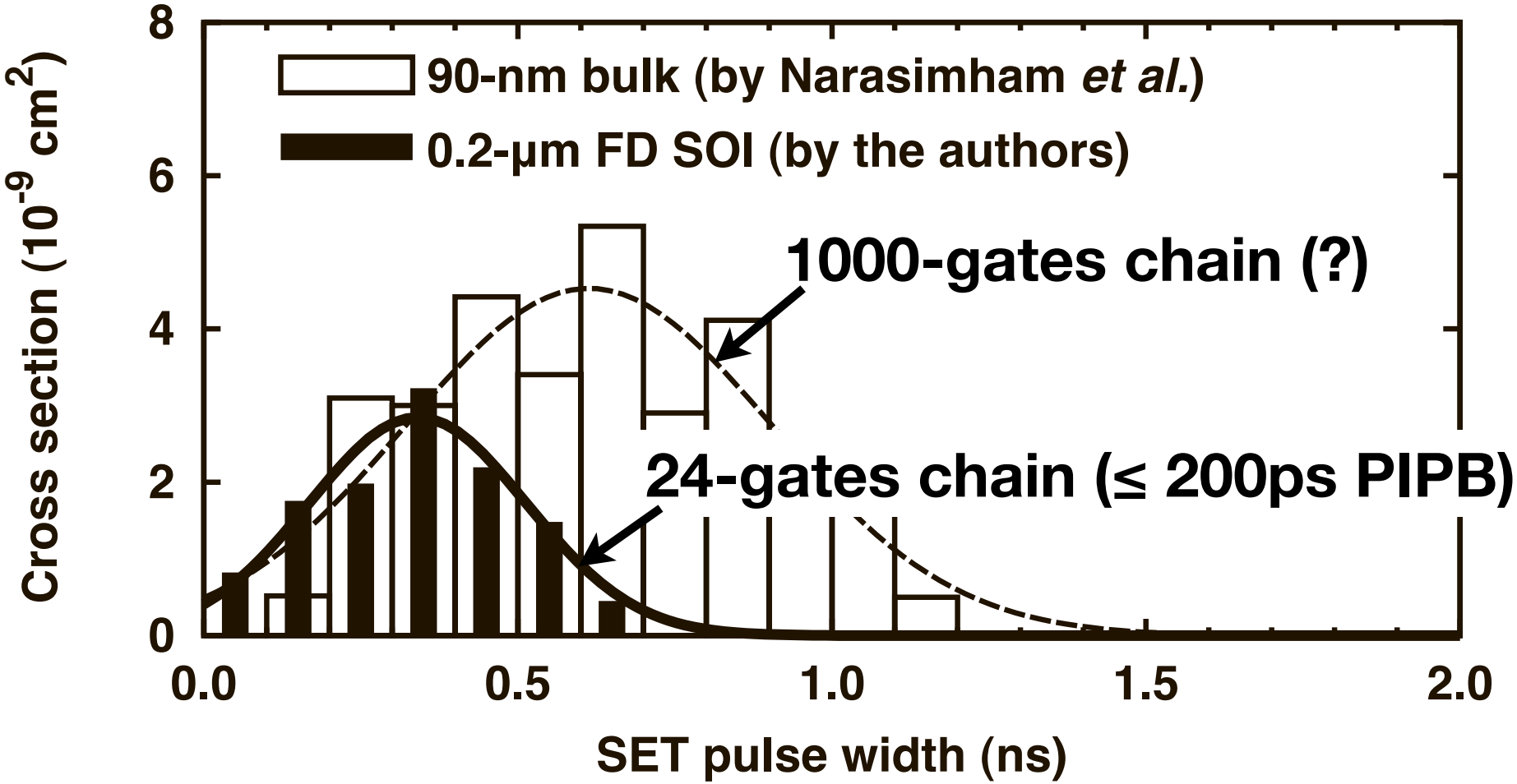

Precise pulse-width comparison requires further study

Original pulse information is essential

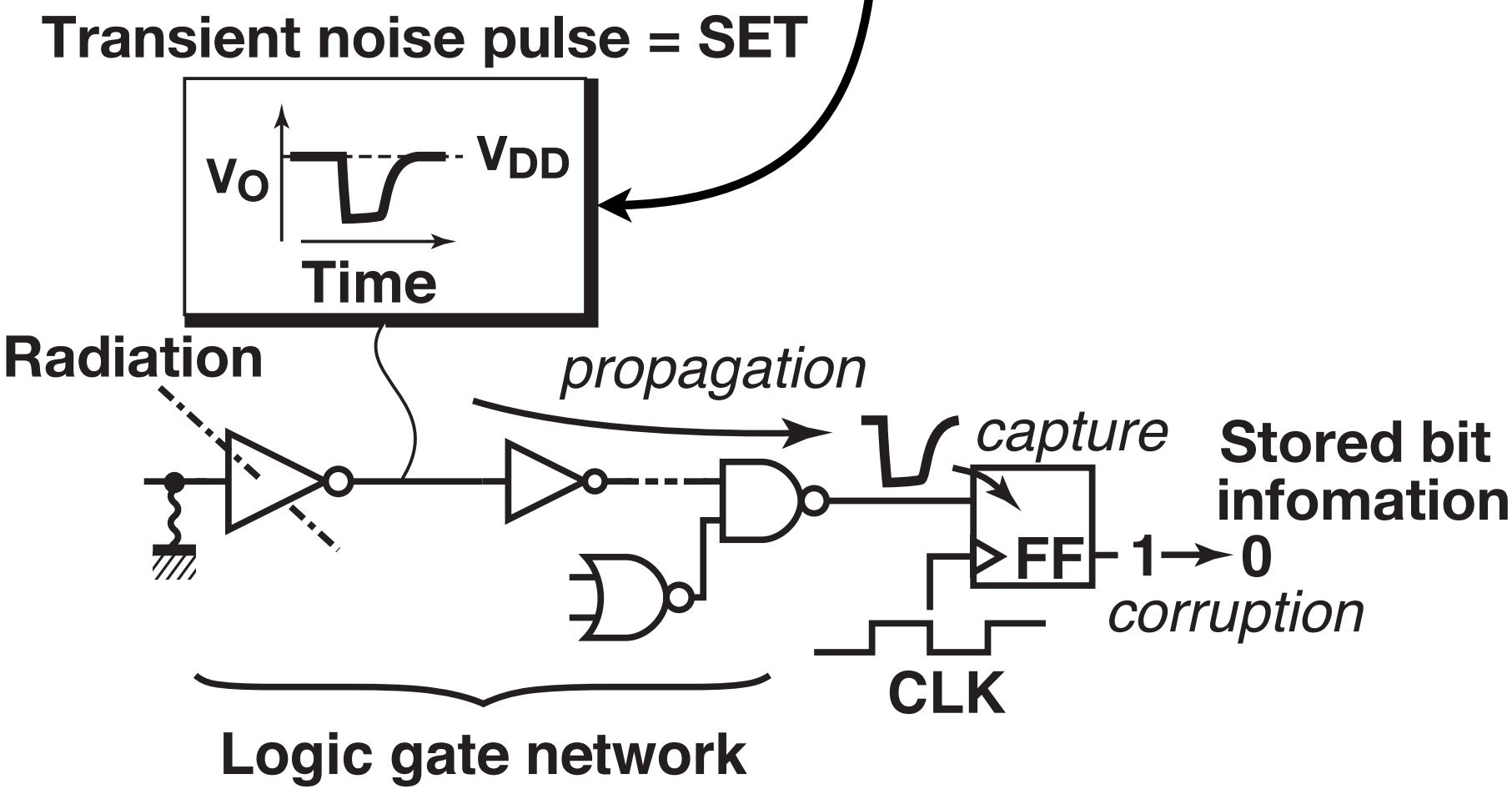

i. On-chip pulse-width measurement
ii. Full-waveform observation technique
iii. Physics-based analytical model

Full-waveform observation

Kobayashi (ISAS) *et al*., IEEE Trans. Nucl. Sci. 55, 2008 p2872

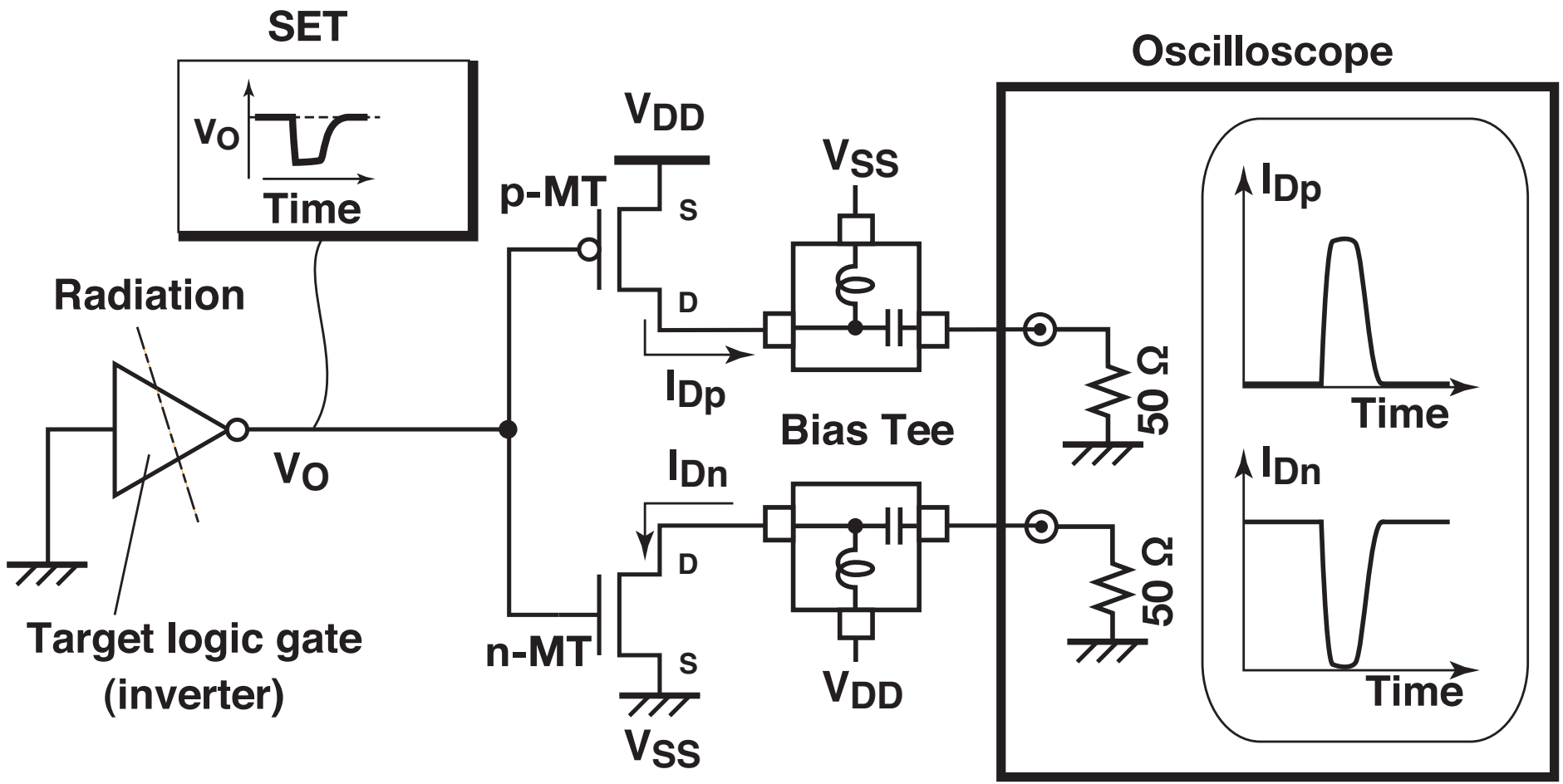

Waveform of SET experimentally observed in advanced CMOS tech.

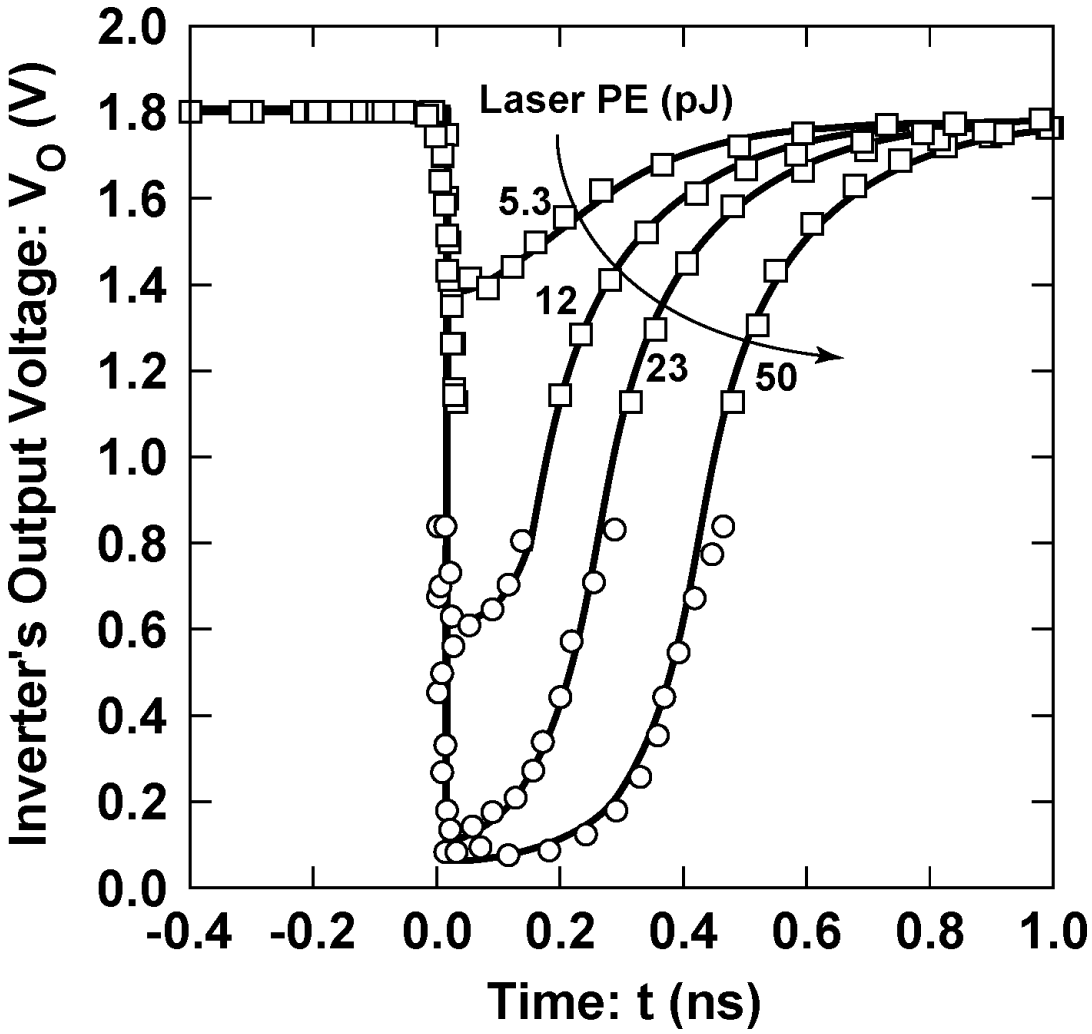

Original pulse information is essential

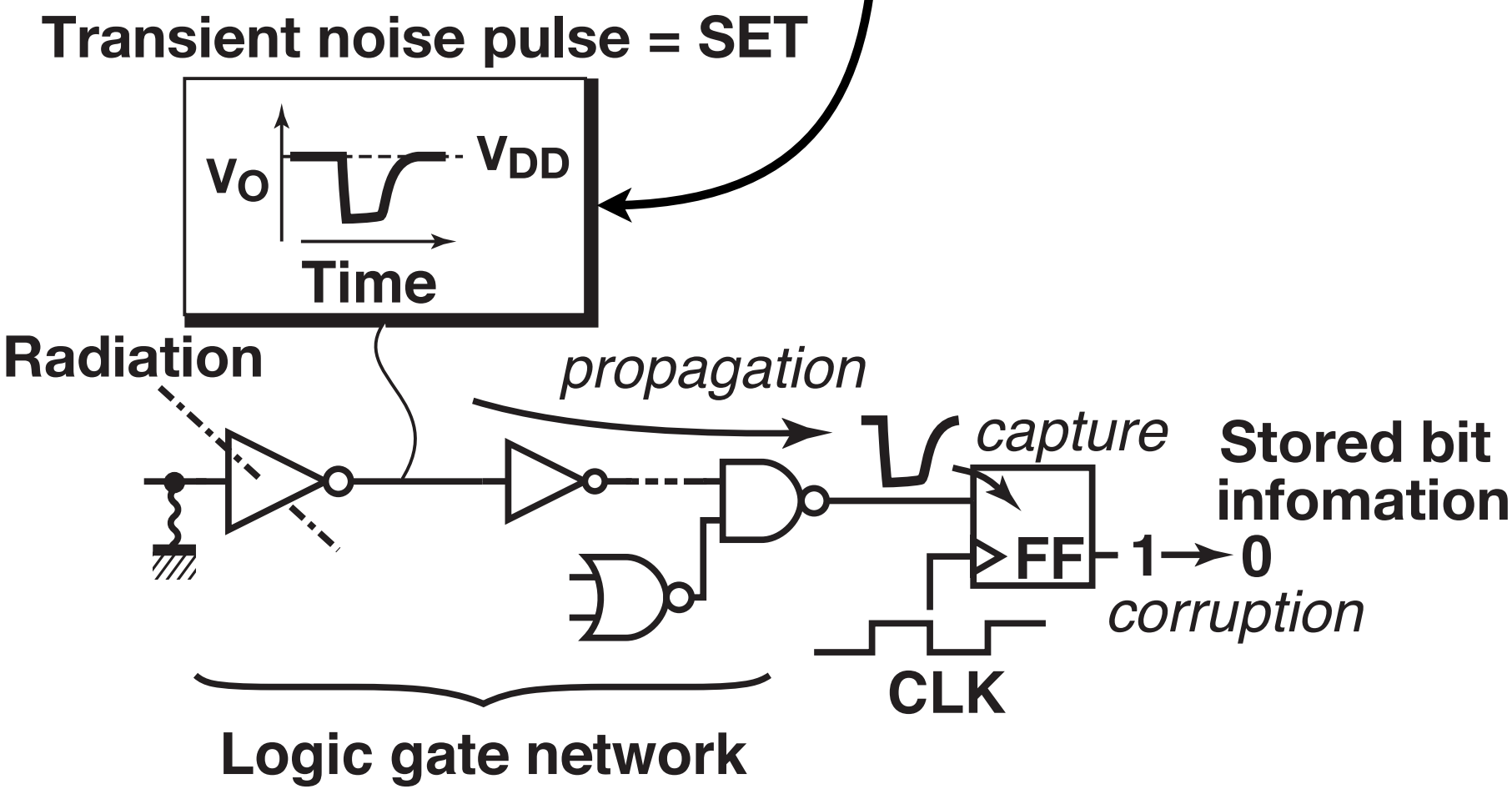

i. On-chip pulse-width measurement
ii. Full-waveform observation technique
iii. Physics-based analytical model

Saturation tendency

Dodd (Sandia National Lab) *et al.*, IEEE Trans. Nucl. Sci. 51, 2004 p3278

Numerical device simulation results

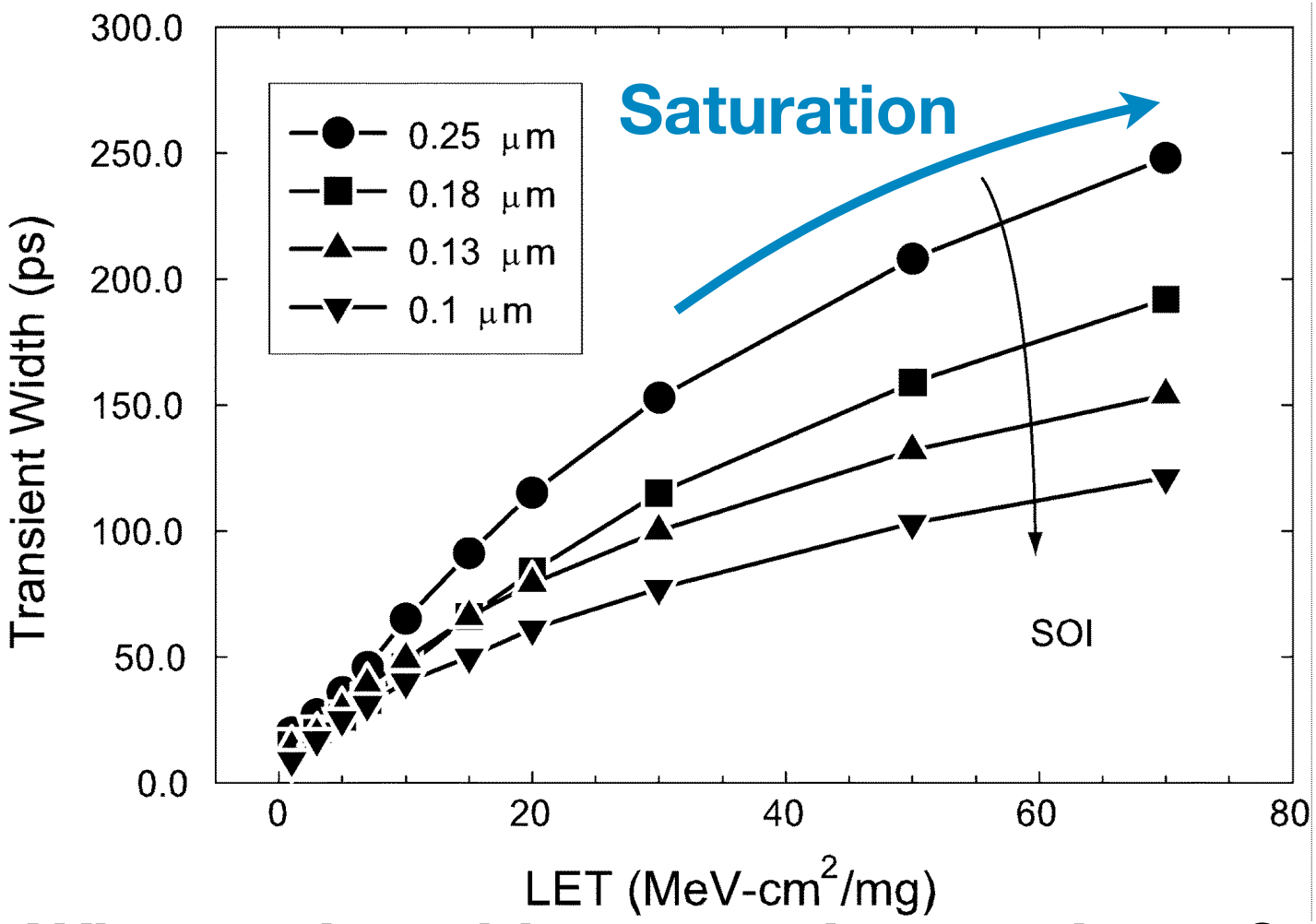

What makes this saturation tendency?

Mechanics was unknown

Stating point of modeling

Numerical device simulation result

V. Ferlet-Cavrois, IEEE Trans. Nucl. Sci. 53 (2006) 3242

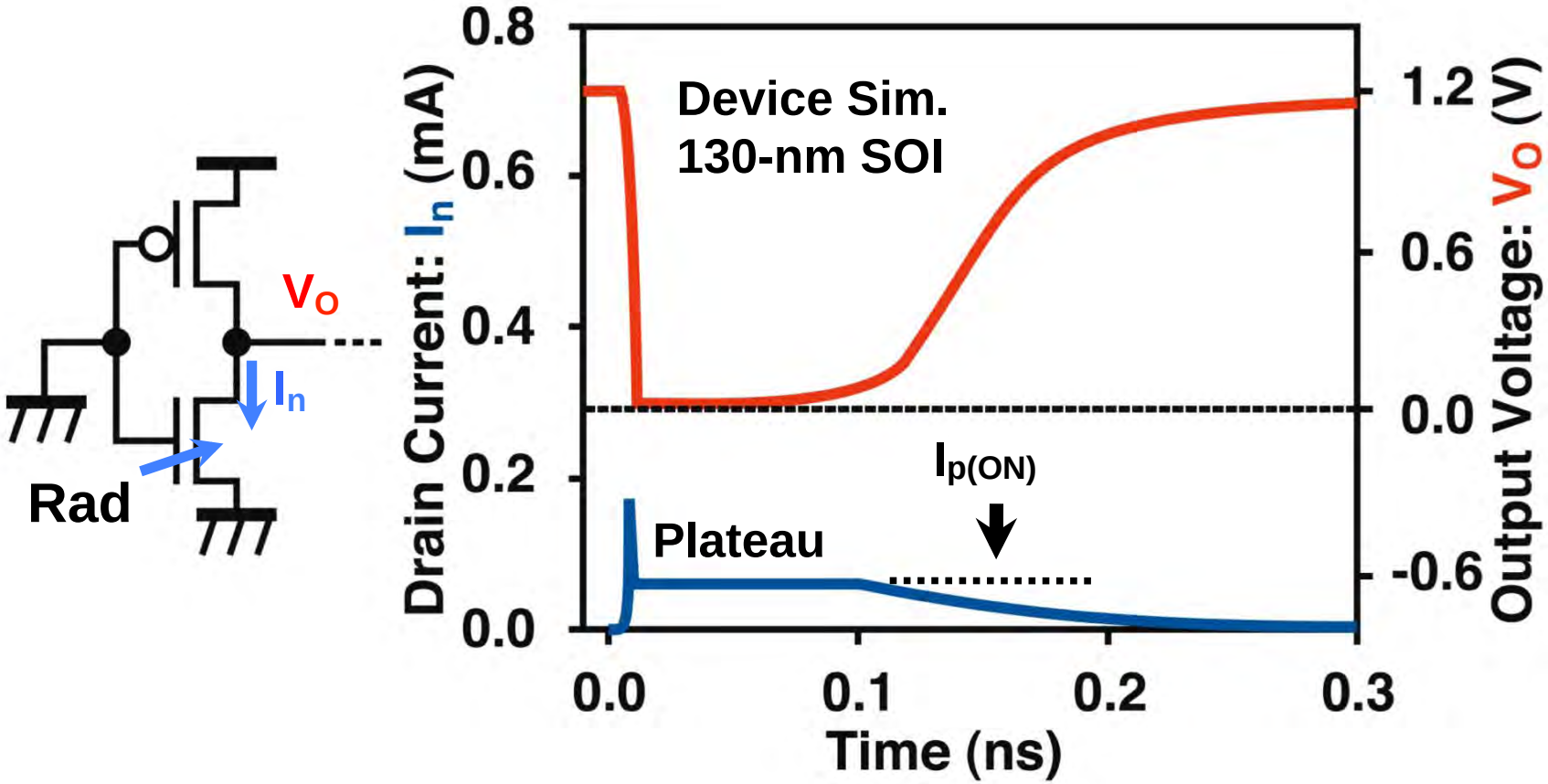

Duration of plateau at $I_{p(ON)}$ = Indicator of SET width

What mechanics is behind this plateau?

Band diagram analysis

Kobayashi (ISAS) *et al.*, IEEE Trans. Nucl. Sci. 56, 2009 p3043

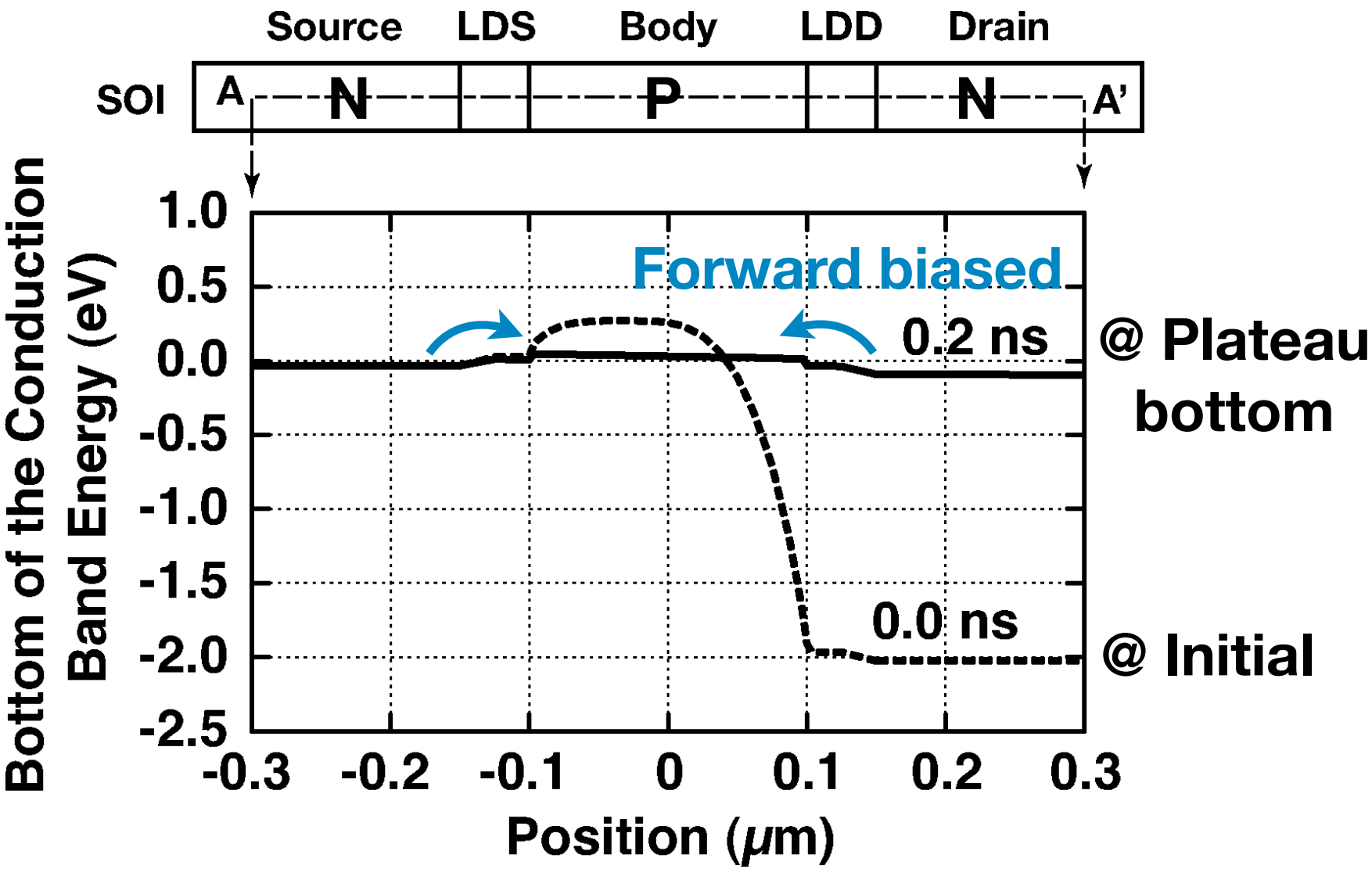

BJT operates in saturation during the plateau bottom

Turn-off behavior of saturated BJT

Sze and Ng, Physics of Semiconductor Devices 2007

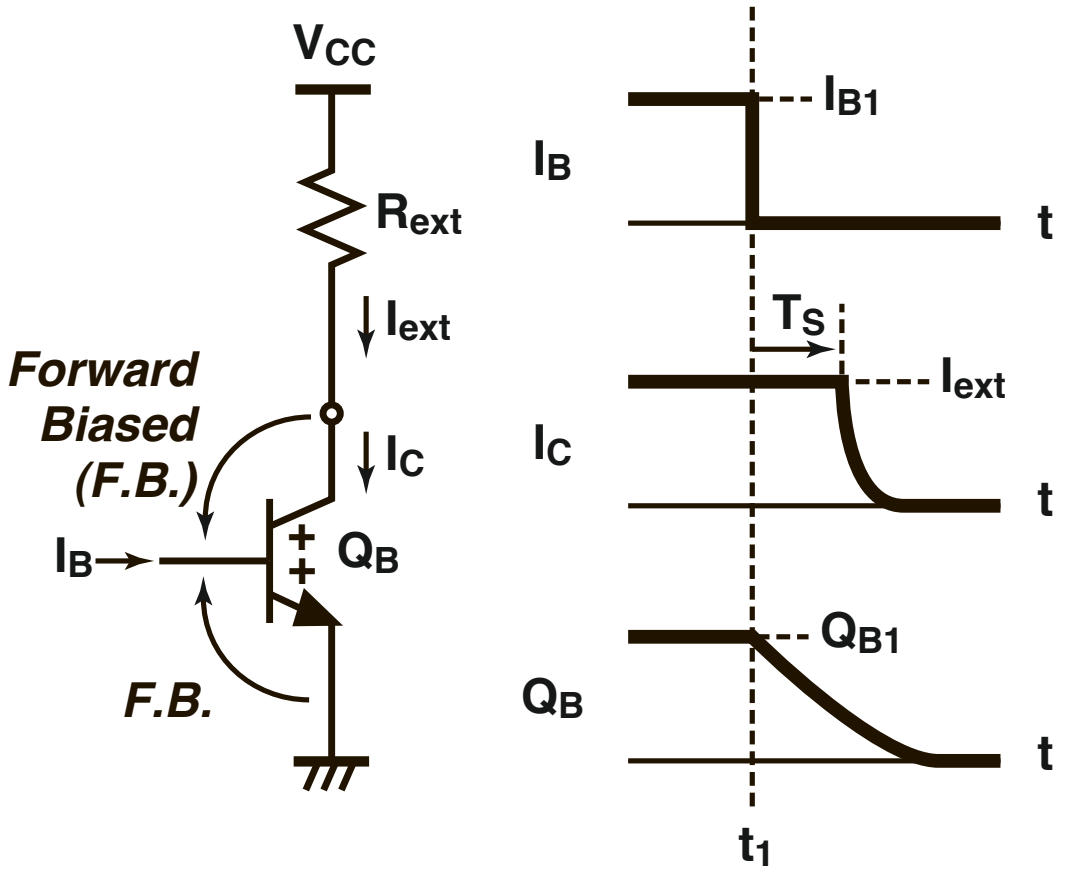

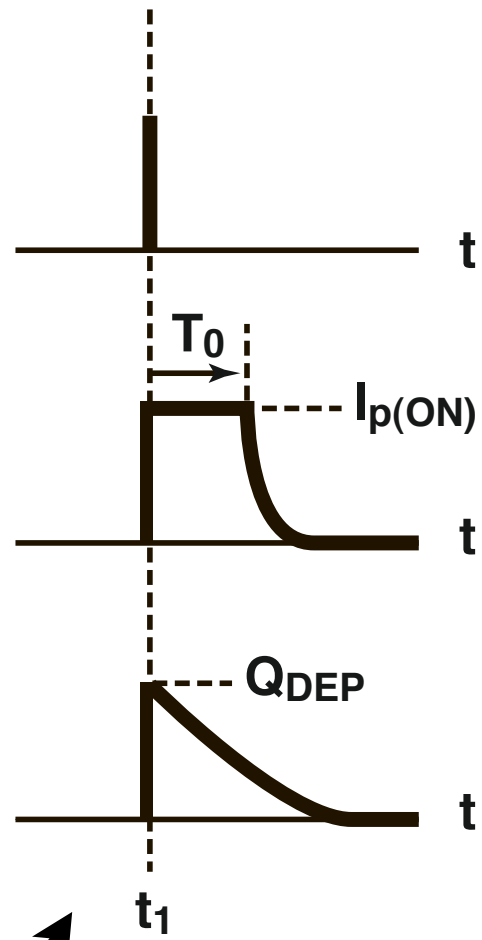

Radiation effect = delta-function-like current injection

Demonstration

Kobayashi (ISAS) *et al.*, IEEE Trans. Nucl. Sci. 56, 2009 p3043

$$t^* = \underbrace{\tau_0 \ln\left(\frac{Q_{\mathrm{DEP}}}{I_{p(\mathrm{ON})}\tau_0}\right)}_{\textbf{Bottom (storage time)}} + \underbrace{\tau_1 + \frac{C_L|V_{Tp}|}{I_{p(\mathrm{ON})}}}_{\textbf{Recovery}}$$

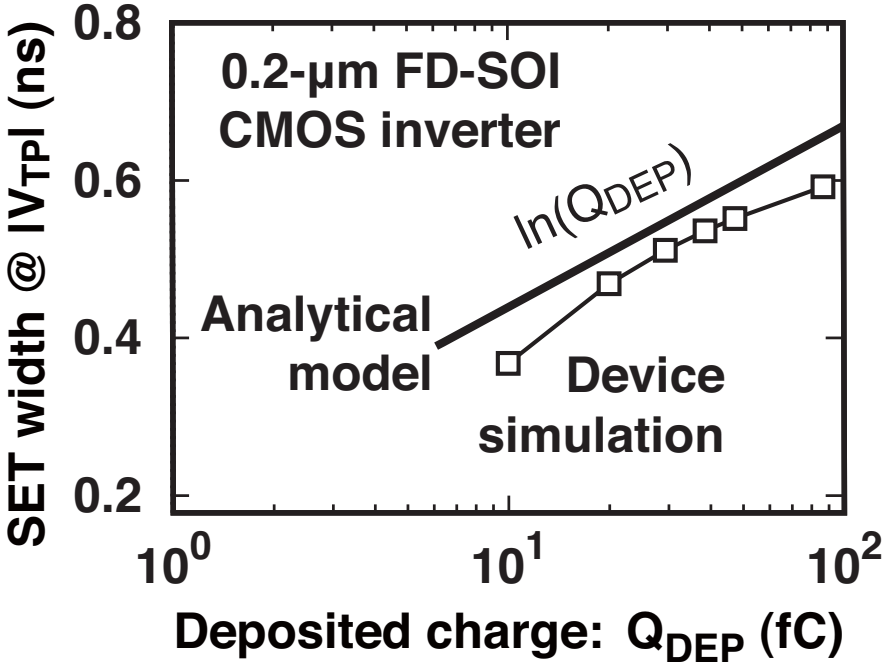

Good agreement

Saturation = log behavior

Summary

Radiation-Induced Pulse Noise in SOI CMOS Logic

1. **How serious radiation problems are**
   Need to protect memory elements.
   Not only in space but also on the ground.

2. **Merits and demerits of SOI**
   BOX suppresses noise charge collection. Need a special care about increase in sensitivity due to small parasitic capacitance, bipolar amplification effect, and propagation-induced broadening

3. **Pulse-noise problems in logic**
   Logic gates need to be protected in near future. Characterization techniques such as pulse-width measurement, full-waveform observation technique, and physics-based analytical models are developed.